ZANUSSI PROFESSIONAL

Magistar Combi TS
Electric Combi Oven 5GN1/1

ITEM # _____

MODEL # _____

NAME # _____

SIS # _____

AIA # _____

218700 (ZCOE61T2A2) Magistar Combi TS combi boiler oven with touch screen control, 5x1/1GN, electric, 3 cooking modes (automatic, recipe program, manual), automatic cleaning, 85mm pitch

Short Form Specification

Item No. _____

Combi oven with high resolution full touch screen interface, multilanguage
- Built-in steam generator with real humidity control based upon Lambda Sensor
- AirFlow air distribution system to achieve maximum performance with 7 fan speed levels
- HP Automatic Cleaning: Automatic and built-in self cleaning system with integrated descale of the steam generator. 5 automatic cycles (soft, medium, strong, extra strong, rinse-only) and economizer functions to save energy, water, detergent and rinse aid
- Cooking modes: Automatic (9 food families with 100+ different pre-installed variants); Programs (a maximum of 1000 recipes can be stored and organized in 16 different categories); Manual (steam, combi and convection cycles); Specialistic Cycles (regeneration, Low Temperature Cooking, proving, EcoDelta, Sous-Vide, Static-Combi, Pasteurization of pasta, dehydration, Food Safe Control and Advanced Food Safe Control)
- Special functions: MultiTimer cooking, Cooking Optimizer to cut running costs, Make-it-Mine to customize interface, Match connectionto Rapido Chiller, SoloMio to customize homepage, agenda Calendar, automatic backup mode to avoid downtime
- USB port to download HACCP data, programs and settings. Connectivity ready
- 6-point multi sensor core temperature probe
- Double glass door with LED lights
- Stainless steel construction throughout
- Supplied with n.1 tray rack 1/1 GN, 85 mm pitch.

APPROVAL: _____

Main Features

- Built-in steam generator for highly precise humidity and temperature control according to the chosen settings.
- Real humidity control based upon Lambda Sensor to automatically recognize quantity and size of food for consistent quality results.
- Dry, hot convection cycle (25 °C - 300 °C): ideal for low humidity cooking.
- Combination cycle (25 °C - 300 °C): combining convected heat and steam to obtain humidity controlled cooking environment, accelerating the cooking process and reducing weight loss.
- Low temperature Steam cycle (25 °C - 99 °C): ideal for sous-vide, re-thermalization and delicate cooking. Steam cycle (100 °C): seafood and vegetables. High temperature steam (25 °C - 130 °C).
- Automatic mode including 9 food families (meat, poultry, fish, vegetables, pasta/rice, eggs, savory and sweet bakery, bread, dessert) with 100+ different pre-installed variants. Through Automatic Sensing Phase the oven optimizes the cooking process according to size, quantity and type of food loaded to achieve the selected cooking result. Real time overview of the cooking parameters. Possibility to personalize and save up to 70 variants per family.
- Special Cycles:
  - Regeneration (ideal for banqueting on plate or rethermalizing on tray),
  - Low Temperature Cooking (to minimize weight loss and maximize food quality),
  - Proving cycle,
  - EcoDelta cooking, cooking with food probe maintaining preset temperature difference between the core of the food and the cooking chamber,
  - Sous-vide cooking,
  - Static Combi (to reproduce traditional cooking from static oven),
  - Pasteurization of pasta,
  - Dehydration cycles (ideal for drying fruits, vegetables, meats, seafood),
  - Food Safe Control (to automatically monitor safety of cooking process in compliance with HACCP hygienic standards),
  - Advanced Food Safe Control (to drive the cooking with pasteurization factor).
- Programs mode: a maximum of 1000 recipes can be stored in the oven's memory, to recreate the exact same recipe at any time. The recipes can be group in 16 different categories to better organize the menu. 16-step cooking programs also available.
- MultiTimer function to manage up to 20 different cooking cycles at the same time, improving flexibility and ensuring excellent cooking results. Can be saved up to 200 MultiTimer programs.
- AirFlow air distribution system to achieve maximum performance in chilling/heating evenness and temperature control thanks to a special design of the chamber combined with high precision variable speed fan.
- Fan with 7 speed levels from 300 to 1500 RPM and reverse rotation for optimal evenness. Fan stops in less than 5 seconds when door is opened.
- 6-point multi sensor core temperature probe for

maximum precision and food safety.
- Pictures upload for full customization of cooking cycles.
- Automatic fast cool down and pre-heat function.
- Grease Collector: predisposed for integrated grease drain and collection for safer operation (dedicated base as optional accessory).
- USB port to download HACCP data, share cooking programs and configurations.
  USB port also allows to plug-in sous-vide probe (optional accessory).
- Back-up mode with self-diagnosis is automatically activated if a failure occurs to avoid downtime.
- 2 different chemical options available: solid and liquid (requires optional accessory).
- Capacity: 5 GN 1/1 trays.
- OptiFlow air distribution system to achieve maximum performance in chilling/heating eveness and temperature control thanks to a special design of the chamber.

Construction

- Double thermo-glazed door with open frame construction, for cool outside door panel. Swing hinged easy-release inner glass on door for easy cleaning.
- Hygienic internal chamber with all rounded corners for easy cleaning.
- 304 AISI stainless steel construction throughout.
- Front access to control board for easy service.
- Integrated spray gun with automatic retracting system for fast rinsing.
- IPX 5 spray water protection certification for easy cleaning.
- Supplied with n.1 tray rack 1/1 GN, 85 mm pitch.
- Integrated door shield to avoid steam and heat dispersion from the door, when the roll-in rack is not used.

User Interface & Data Management

- High resolution full touch screen interface (translated in more than 30 languages) - color-blind friendly panel.
- Make-it-mine feature to allow full personalization or locking of the user interface.
- SoloMio lets the user group the favorite functions in the homepage for immediate access.
- Calendar works as an agenda where the user can plan the daily work and receive personalized alerts for each task.
- Connectivity ready for real time access to connected appliances from remote and HACCP monitoring (requires optional accessory).
- Trainings and guidances supporting materials easily accessible by scanning QR-Code with any mobile device.
- Automatic consumption visualization at the end of the cycle.
- Connectivity ready for real time access to connected appliances from remote and data monitoring (requires optional accessory – contact the Company for more details).
- With Match function the Oven and the Blast Chiller are connected to each other and communicate in order to guide the user through the cook&chill process optimizing time and efficiency (requires optional accessory).

Sustainability

- Reduced power function for customized slow cooking cycles.
- HP Automatic Cleaning: Automatic and built-in self cleaning system with integrated descale of the steam generator. 5 automatic cycles (soft, medium, strong, extra strong, rinse-only) and green functions to save energy, water, detergent and rinse aid. Also programmable with delayed start.
- Cooking Optimizer function organizes the cooking sequence of the chosen cycles optimizing the work in the kitchen from a time and energy efficiency point of view.
- Zero Waste provides chefs with useful tips for minimizing food waste.
  Zero Waste is a library of Automatic recipes that aims to:
  - give a second life to raw food close to expiration date (e.g.: from milk to yogurt)
  - obtain genuine and tasty dishes from overripe fruit/vegetables (usually considered not appropriate for sale)
  - promote the use of typically discarded food items (e.g.: carrot peels).

Included Accessories

- 1 of Fixed tray rack, 5 GN 1/1, 85mm pitch PNC 922740

Optional Accessories

External reverse osmosis filter for single tank Dishwashers with atmosphere boiler and Ovens	PNC 864388	❑
Water softener with cartridge and flow meter (high steam usage)	PNC 920003	❑
Water filter with cartridge and flow meter for 6 & 10 GN 1/1 ovens (low-medium steam usage - less than 2hrs per day full steam)	PNC 920004	❑
Water softener with salt for ovens with automatic regeneration of resin	PNC 921305	❑
Wheel kit for 6 & 10 GN 1/1 and 2/1 GN oven base (not for the disassembled one)	PNC 922003	❑
Pair of AISI 304 stainless steel grids, GN 1/1	PNC 922017	❑
Pair of grids for whole chicken (8 per grid - 1,2kg each), GN 1/1	PNC 922036	❑
AISI 304 stainless steel grid, GN 1/1	PNC 922062	❑
Grid for whole chicken (4 per grid - 1,2kg each), GN 1/2	PNC 922086	❑
External side spray unit (needs to be mounted outside and includes support to be mounted on the oven)	PNC 922171	❑
Baking tray for 5 baguettes in perforated aluminum with silicon coating, 400x600x38mm	PNC 922189	❑
Baking tray with 4 edges in perforated aluminum, 400x600x20mm	PNC 922190	❑
Baking tray with 4 edges in aluminum, 400x600x20mm	PNC 922191	❑
Pair of frying baskets	PNC 922239	❑
AISI 304 stainless steel bakery/pastry grid 400x600mm	PNC 922264	❑
Double-step door opening kit	PNC 922265	❑
Grid for whole chicken (8 per grid - 1,2kg each), GN 1/1	PNC 922266	❑
USB probe for sous-vide cooking	PNC 922281	❑
Grease collection tray, GN 1/1, H=100 mm	PNC 922321	❑
Kit universal skewer rack and 4 long skewers for GN 1/1 ovens	PNC 922324	❑
Universal skewer rack	PNC 922326	❑
4 long skewers	PNC 922327	❑
Smoker for lengthwise and crosswise oven	PNC 922338	❑
Multipurpose hook	PNC 922348	❑
4 flanged feet for 6 & 10 GN , 2", 100-130mm	PNC 922351	❑

The company reserves the right to make modifications to the products without prior notice. All information correct at time of printing.

- Grid for whole duck (8 per grid - 1,8kg each), GN 1/1 PNC 922362 ❑
- Tray support for 6 & 10 GN 1/1 disassembled open base PNC 922382 ❑
- Wall mounted detergent tank holder PNC 922386 ❑
- USB single point probe PNC 922390 ❑
- IoT module for OnE Connected and Match (one IoT board per appliance - to connect oven to the blast chiller for Cook&Chill process). PNC 922421 ❑
- Tray rack with wheels, 6 GN 1/1, 65mm pitch PNC 922600 ❑
- Tray rack with wheels 5 GN 1/1, 80mm pitch PNC 922606 ❑
- Bakery/pastry tray rack with wheels holding 400x600mm grids for 6 GN 1/1 oven and blast chiller freezer, 80mm pitch (5 runners) PNC 922607 ❑
- Slide-in rack with handle for 6 & 10 GN 1/1 oven PNC 922610 ❑
- Open base with tray support for 6 & 10 GN 1/1 oven PNC 922612 ❑
- Cupboard base with tray support for 6 & 10 GN 1/1 oven PNC 922614 ❑
- Hot cupboard base with tray support for 6 & 10 GN 1/1 oven holding GN 1/1 or400x600mm PNC 922615 ❑
- External connection kit for liquid detergent and rinse aid PNC 922618 ❑
- Grease collection kit for GN 1/1-2/1 cupboard base (trolley with 2 tanks, open/close device for drain) PNC 922619 ❑
- Stacking kit for 6+6 GN 1/1 ovens on electric 6+10 GN 1/1 GN ovens PNC 922620 ❑
- Trolley for slide-in rack for 6 & 10 GN 1/1 oven and blast chiller freezer PNC 922626 ❑
- Trolley for mobile rack for 2 stacked 6 GN 1/1 ovens on riser PNC 922628 ❑
- Trolley for mobile rack for 6 GN 1/1 on 6 or 10 GN 1/1 ovens PNC 922630 ❑
- Riser on feet for 2 6 GN 1/1 ovens or a 6 GN 1/1 oven on base PNC 922632 ❑
- Riser on wheels for stacked 2x6 GN 1/1 ovens, height 250mm PNC 922635 ❑
- Stainless steel drain kit for 6 & 10 GN oven, dia=50mm PNC 922636 ❑
- Plastic drain kit for 6 &10 GN oven, dia=50mm PNC 922637 ❑
- Trolley with 2 tanks for grease collection PNC 922638 ❑
- Grease collection kit for GN 1/1-2/1 open base (2 tanks, open/close device for drain) PNC 922639 ❑
- Wall support for 6 GN 1/1 oven PNC 922643 ❑
- Dehydration tray, GN 1/1, H=20mm PNC 922651 ❑
- Flat dehydration tray, GN 1/1 PNC 922652 ❑
- Open base for 6 & 10 GN 1/1 oven, disassembled - NO accessory can be fitted with the exception of 922382 PNC 922653 ❑
- Bakery/pastry rack kit for 6 GN 1/1 oven with 5 racks 400x600mm and 80mm pitch PNC 922655 ❑
- Stacking kit for 6 GN 1/1 combi oven on 15&25kg blast chiller/freezer crosswise PNC 922657 ❑
- Heat shield for stacked ovens 6 GN 1/1 on 6 GN 1/1 PNC 922660 ❑
- Heat shield for stacked ovens 6 GN 1/1 on 10 GN 1/1 PNC 922661 ❑
- Heat shield for 6 GN 1/1 oven PNC 922662 ❑
- Compatibility kit for installation of 6 GN 1/1 electric oven on previous 6 GN 1/1 electric oven (old stacking kit 922319 is also needed) PNC 922679 ❑
- Fixed tray rack for 6 GN 1/1 and 400x600mm grids PNC 922684 ❑
- Kit to fix oven to the wall PNC 922687 ❑
- 4 high adjustable feet for 6 & 10 GN ovens, 100-115MM PNC 922688 ❑
- Tray support for 6 & 10 GN 1/1 oven base PNC 922690 ❑
- Detergent tank holder for open base PNC 922699 ❑
- Bakery/pastry runners 400x600mm for 6 & 10 GN 1/1 oven base PNC 922702 ❑
- Wheels for stacked ovens PNC 922704 ❑
- Mesh grilling grid, GN 1/1 PNC 922713 ❑
- Probe holder for liquids PNC 922714 ❑
- Odour reduction hood with fan for 6 & 10 GN 1/1 electric ovens PNC 922718 ❑
- Odour reduction hood with fan for 6+6 or 6+10 GN 1/1 electric ovens PNC 922722 ❑
- Condensation hood with fan for 6 & 10 GN 1/1 electric oven PNC 922723 ❑
- Condensation hood with fan for stacking 6+6 or 6+10 GN 1/1 electric ovens PNC 922727 ❑
- Exhaust hood with fan for 6 & 10 GN 1/1 ovens PNC 922728 ❑
- Exhaust hood with fan for stacking 6+6 or 6+10 GN 1/1 ovens PNC 922732 ❑
- Exhaust hood without fan for 6&10 1/1GN ovens PNC 922733 ❑
- Exhaust hood without fan for stacking 6+6 or 6+10 GN 1/1 ovens PNC 922737 ❑
- Fixed tray rack, 5 GN 1/1, 85mm pitch PNC 922740 ❑
- 4 high adjustable feet for 6 & 10 GN ovens, 230-290mm PNC 922745 ❑
- Tray for traditional static cooking, H=100mm PNC 922746 ❑
- Double-face griddle, one side ribbed and one side smooth, 400x600mm PNC 922747 ❑
- Trolley for grease collection kit PNC 922752 ❑
- Water inlet pressure reducer PNC 922773 ❑
- Kit for installation of electric power peak management system for 6 GN and 10 GN ovens PNC 922774 ❑
- Extension for condensation tube, 37cm PNC 922776 ❑
- Non-stick universal pan, GN 1/1, H=20mm PNC 925000 ❑
- Non-stick universal pan, GN 1/ 1, H=40mm PNC 925001 ❑
- Non-stick universal pan, GN 1/1, H=60mm PNC 925002 ❑
- Double-face griddle, one side ribbed and one side smooth, GN 1/1 PNC 925003 ❑
- Aluminum grill, GN 1/1 PNC 925004 ❑
- Frying pan for 8 eggs, pancakes, hamburgers, GN 1/1 PNC 925005 ❑
- Flat baking tray with 2 edges, GN 1/1 PNC 925006 ❑
- Baking tray for 4 baguettes, GN 1/1 PNC 925007 ❑

The company reserves the right to make modifications to the products without prior notice. All information correct at time of printing.

- Potato baker for 28 potatoes, GN 1/1 PNC 925008 ❑
- Non-stick universal pan, GN 1/2, H=20mm PNC 925009 ❑
- Non-stick universal pan, GN 1/2, H=40mm PNC 925010 ❑
- Non-stick universal pan, GN 1/2, H=60mm PNC 925011 ❑
- Compatibility kit for installation on previous base GN 1/1 PNC 930217 ❑

The company reserves the right to make modifications to the products without prior notice. All information correct at time of printing.

Magistar Combi TS
Electric Combi Oven 5GN1/1

Front

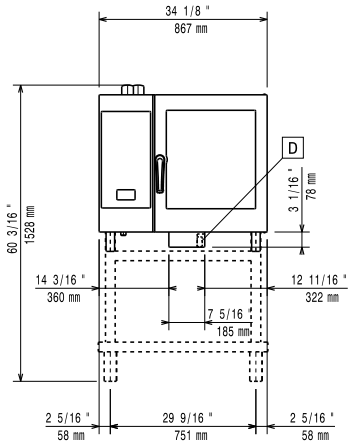

Side

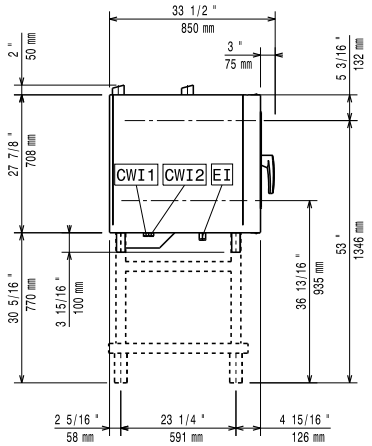

CWI-1 = Cold Water inlet 1 (cleaning)

CWI-2 = Cold Water Inlet 2 (steam generator)

D = Drain

DO = Overflow drain pipe

EI = Electrical inlet (power)

Top

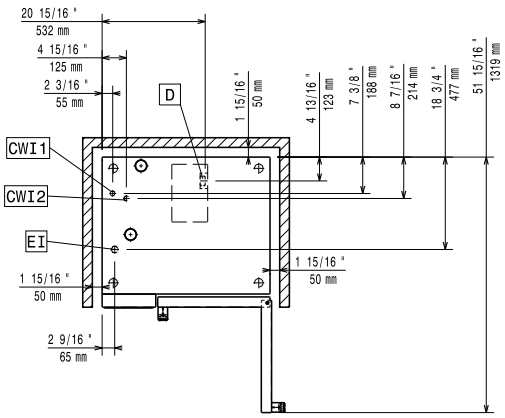

Electric

Supply voltage:	
218700 (ZCOE61T2A2)	380-415 V/3N ph/50-60 Hz
Electrical power, default:	11.1 kW
Electrical power max.:	11.8 kW
Circuit breaker required	

Water:

Water inlet "CW" connection:	3/4"
Water inlet connections "CWI1-CWI2":	3/4"
Pressure, bar min/max:	1-6 bar
Drain "D":	50mm

Electrolux Professional recommends the use of treated water, based on testing of specific water conditions.

Please refer to user manual for detailed water quality information.

Max inlet water supply temperature:	30 °C
Chlorides:	<17 ppm
Conductivity:	>50 µS/cm

Installation:

Clearance:	Clearance: 5 cm rear and right hand sides.
Suggested clearance for service access:	50 cm left hand side.

Capacity:

Trays type:	5 - 1/1 Gastronorm
Max load capacity:	30 kg

Key Information:

Door hinges:	
External dimensions, Width:	867 mm
External dimensions, Depth:	775 mm
External dimensions, Height:	808 mm
Net weight:	117 kg
Shipping weight:	133 kg
Shipping volume:	0.89 m³

The company reserves the right to make modifications to the products without prior notice. All information correct at time of printing.

2024.10.08